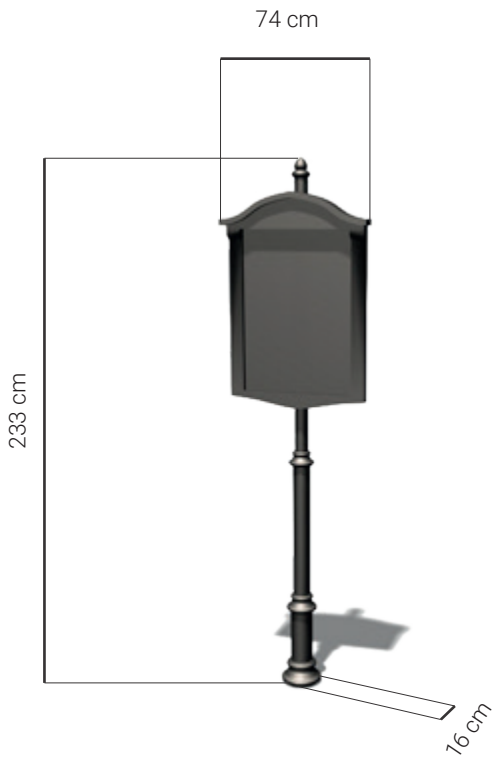

GENERAL TECHNICAL DATA

dimensions:

- height: 233 cm
- height with anchoring section: 281 cm
- width: 74 cm
- depth: 16 cm
- board surface: 560 mm x 700 mm

weight: - 46 kg

materials:
- carbon steel
- cast iron

DESCRIPTION

Welded construction. Construction made of steel pipes with a diameter of 60 mm and 76 mm and steel sheets 6 mm thick. The board surface is made of 4 mm thick sheet metal. Decorative elements are made of cast iron.
The product is manufactured in carbon steel (s235jr), galvanised and powder-coated according to RAL palette. The board is designed to apply self-adhesive foil graphics with solvent print protected by lamination. The board can be used on one side.

All items of street furniture must be properly anchored in accordance with the manufacturer's technical instructions. The manufacturer is not responsible for damage caused by negligent use or failure to follow the instructions.

PROJEKTANT

product:
Royal information board 08.039.1
version: 1
designer: Tomasz Szpytma

In accordance with the Polish Law on Copyright and Related Rights of 04.02.1994 (Official Journal of Laws No. 24, item 83, corrected: Journal of Laws No. 43, item 170) and in accordance with the EU copyright legislation including all EU directives and regulations on copyright , Zano Mirosław Zarotyński Company, reserves the copyright of drawings, descriptions, 3D models, renderings, graphics, content contained in offers, attachments to offers and all other documents. Its content is the intellectual property of ZANO Miroslaw Zarotinski company. The use of author's ideas, solutions, copying, distribution of photos, graphics or fragments of graphics, descriptive texts, for profit, without the permission of the author - ZANO Mirosław Zarotyński company - is prohibited and constitutes a copyright infringement and is punishable.

FRONT VIEW

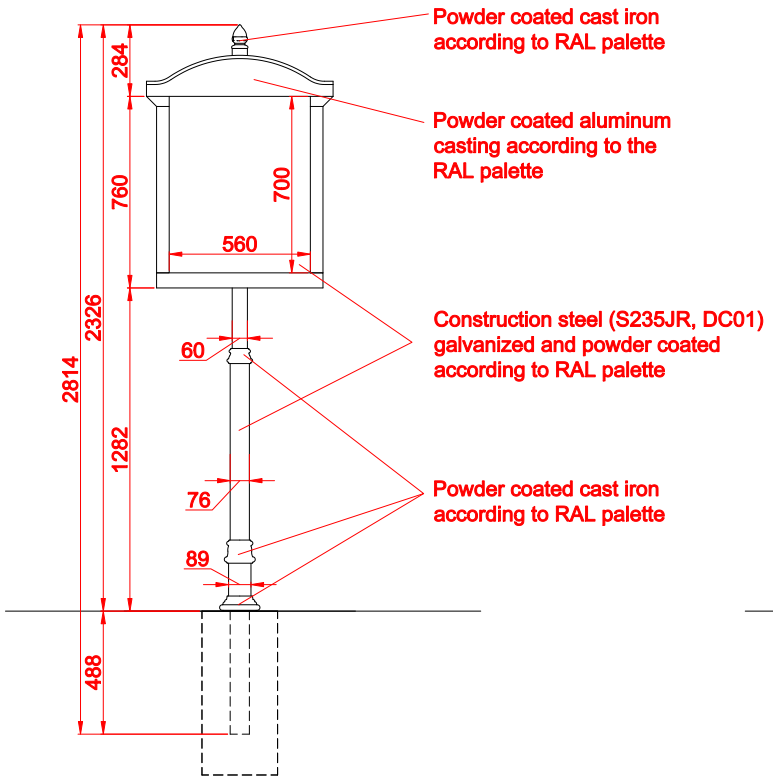

SIDE VIEW

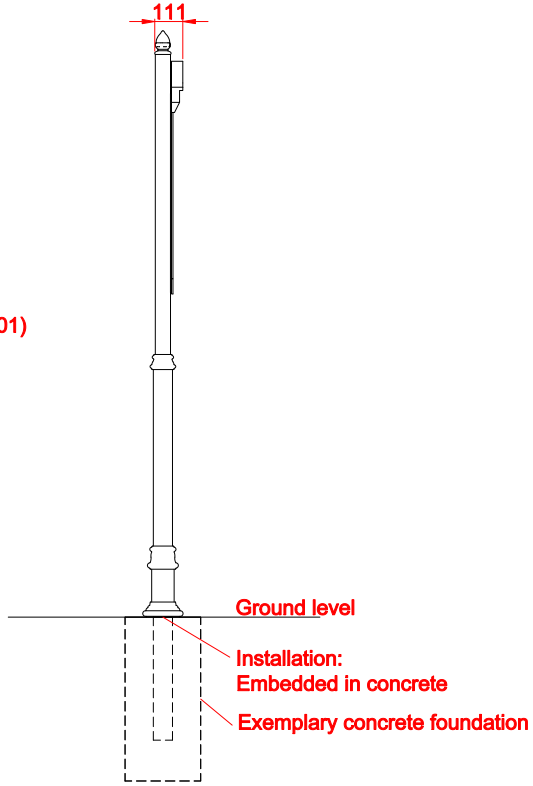

ISOMETRIC VIEW

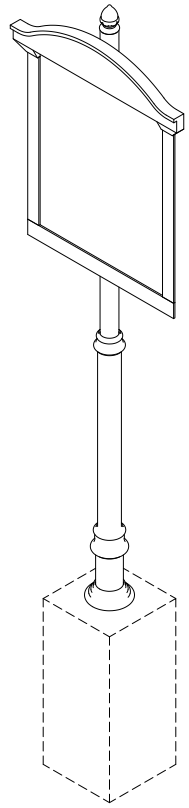

TOP VIEW

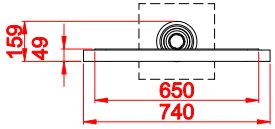

MOUNTING HOLES SPACING

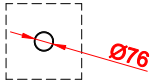

Dimensions given in [mm]

Notice Board 08.039.1	ZANO Street Furniture Lindego 7A, 30-148 Cracow, Poland phone: +48 12 200 20 53 email: office@zano.pl
Number:	120914-v1
Sheet:	A4
Scale:	1:30
Mass:	46 kg

In accordance with the Polish Law on Copyright and Related Rights of 04.02.1994 (Official Journal of Laws No. 24, item 83, corrected: Journal of Laws No. 43, item 170) and in accordance with the EU copyright legislation including all EU directives and regulations on copyright , Zano Miroslaw Zarotyriski Company, reserves the copyright of drawings, descriptions, 3D models, renderings, graphics, content contained in offers, attachments to offers and all other documents. Its content is the intellectual property of ZANO Miroslaw Zarotinski company. The use of author's ideas, solutions, copying, distribution of photos, graphics or fragments of graphics, descriptive texts, for profit, without the permission of the author - ZANO Miroslaw Zarotyriski company - is prohibited and constitutes a copyright infringement and is punishable.